Increase the promotion of agricultural machinery and promote economic development

The economic growth effects generated during the development of agricultural mechanization are cyclical. The important content of modern agricultural construction is to play a mechanized role to promote the sustainable development of the rural economy. In a sense, modern agriculture is also industrial agriculture, and the process of agricultural mechanization is the process of rural industrialization.

Microwave drying machinery

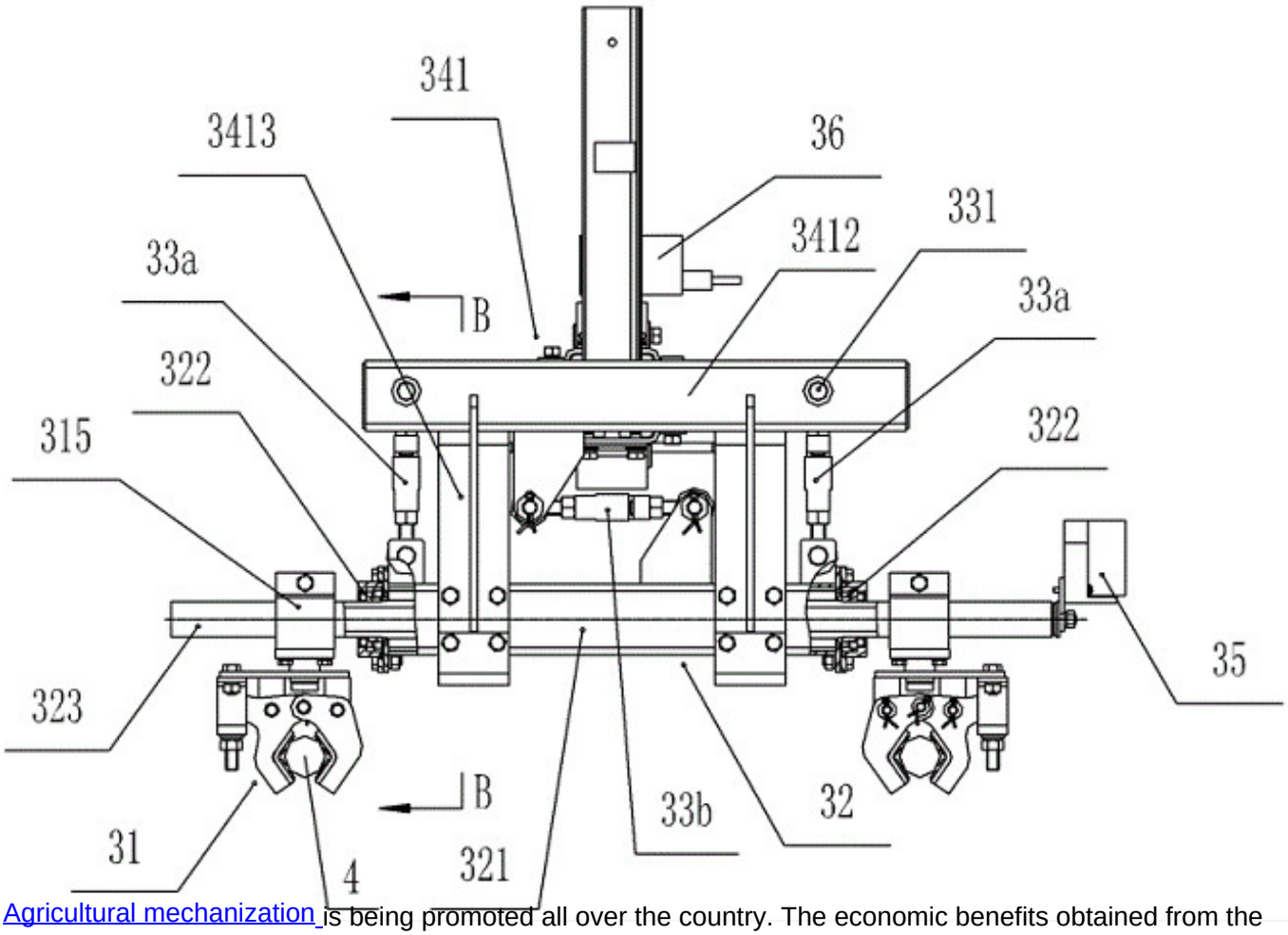

Agricultural mechanization is being promoted all over the country. The economic benefits obtained from the current formal analysis, different development models and different construction approaches are all different, but the solution to the problem of agricultural mechanization is unavoidable. The promotion of agricultural machinery has entered the stage of standardization, and has played a certain role in promoting modern agricultural development and new rural construction.

The significance of agricultural machinery promotion in the development of rural economy

1. 1 Improve agricultural production efficiency

The promotion of agricultural machinery has a strong superiority. It has the production strength that is incomparable between manpower and animal power. Realizing the mechanized production of agriculture, it can overdo more tasks within the specified time, save production time, reduce manpower requirements, and at the same time ensure the production quality and improve production efficiency. In addition, the higher the production efficiency of agriculture, the easier it is to expand the scale of production. When a certain scale of production is formed, the goal of agricultural industrialization will be smoothly realized, and the sound cycle of the economy will be driven on this basis. The significance of the promotion of agricultural machinery is reflected to the greatest extent.

1.2 Raising farmers' income levels

Studying the experience of agricultural machinery promotion in developed areas shows that the higher the level of agricultural machinery promotion, the greater the scope of promotion, the more comprehensive the farmers' production awareness, and the widespread use of mechanical equipment, which drives the rapid growth of the rural economy. The more stable the rural economy develops, the more peasants earn their income, and the quality of their lives rises to a new level in a subtle way. It is beyond doubt that machinery drives wealth to become a reality.

From a theoretical point of view, it is very convenient to promote agricultural machinery in a comprehensive way, to increase production efficiency and expand production scale, so that a large amount of surplus labor will occur. It is suggested that the original producers turn to the secondary and tertiary industries to adjust the industrial structure as a whole, and rationally allocate human resources. Farmers will not only be able to obtain more income from them, but also reduce their own work pressure. In addition, agricultural mechanization has expanded the scale of production, and the form of circulation of agricultural products in the market will change significantly. With the continuous increase in the added value of products, farmers' income will be guaranteed and production confidence will be stronger.

In short, the development of agricultural mechanization is an important part of the construction of a new socialist countryside. It is developing in a direction of integration and good and fast, which is conducive to raising farmers' income and ultimately achieving the goal of deepening reform of the market economic system. Giving full play to the promotion role of agricultural machinery is crucial to the adjustment of agricultural production structure, the improvement of agricultural production level, and the rapid development of local economy.